COPYRIGHT © UNPUBLISHED ALUMA-FORM, Inc. MEMPHIS, TENNESSEE U.S.A. ALL RIGHTS RESERVED

DUPLICATION, DISTRIBUTION OR ALTERATION OF THIS DOCUMENT BY ANY MEANS, IN WHOLE OR IN PART, IS STRICTLY PROHIBITED. DISCLOSED, WHETHER PATENTABLE OR OTHERWISE, IS THE CONFIDENTIAL, PROPRIETARY AND INTELLECTUAL PROPERTY OF THIS DOCUMENT OR CONTAINED INFORMATION, WITHOUT FIRST OBTAINING EXPLICIT WRITTEN AUTHORIZATION.

ITEM	PART No.	QTY	DESCRIPTION
1	43535	1	COLLAPSED ASSEMBLY (CAM-T-ECM)
2	14015	2	4WT-132
3	30019	18	BOLT, HEX, 1/2" X 1-1/4"
4	30039	18	1/2" MEDIUM HELICAL LOCKWASHER
5	30009	18	NUT, HEX, 1/2"
6	06031	3	PIPE, 2" SCHEDULE 40 X 72" LONG
7	14002	1	2WT, 1/2" X 5/8"
8	42600	1	STABILIZER MOUNTING ASSEMBLY
9	53566	6	CAM-P/S-1-4

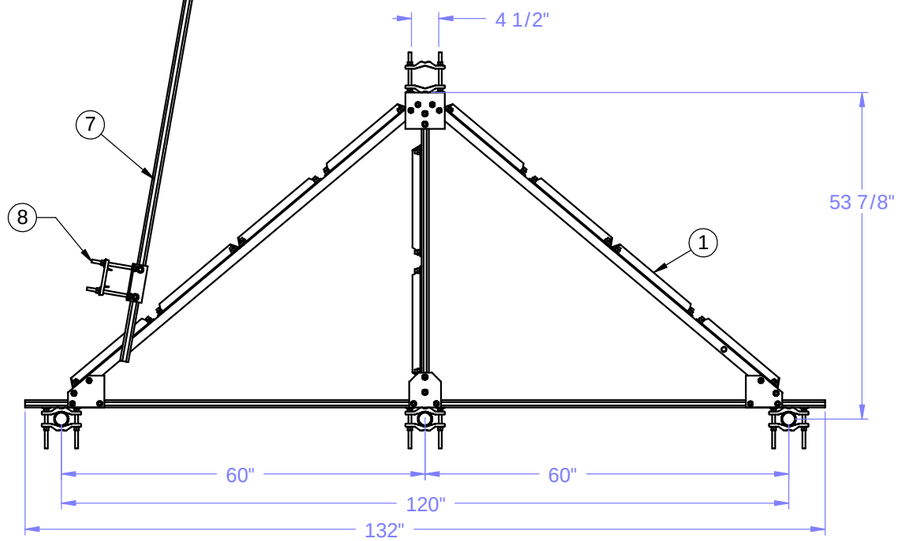

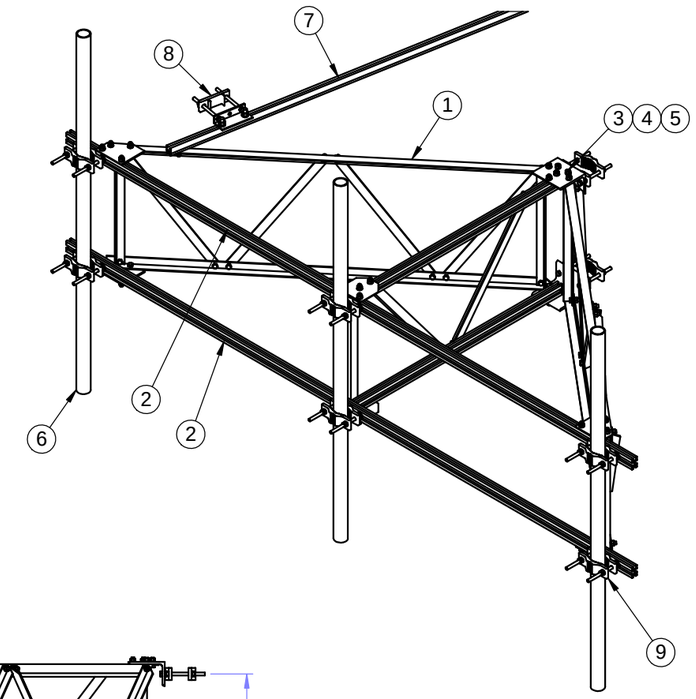

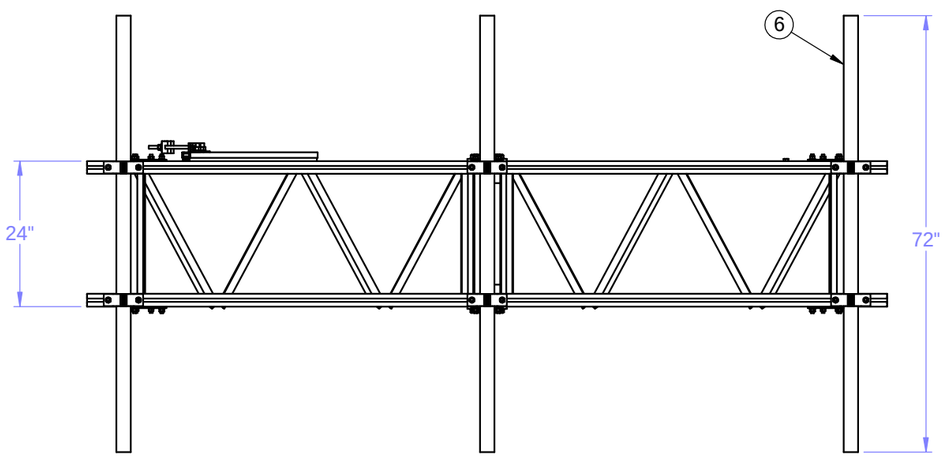

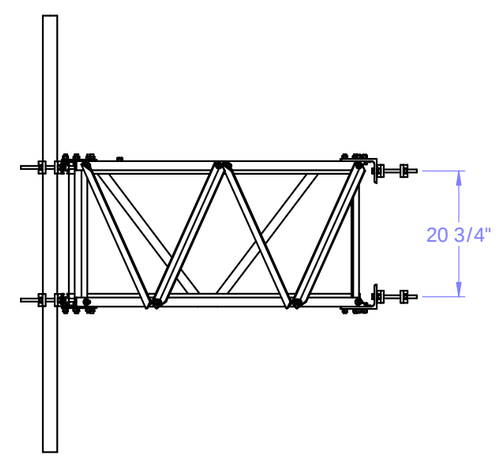

CHANGE / REVISION DESCRIPTION	E. A. NO.	CHANGE DATE
1 WAS 43522	3232	20-NOV-02

REVISION LEVEL **C**

PART NUMBER **69005**

ALUMA-FORM, Inc.
3625 OLD GETWELL ROAD,
MEMPHIS, TN 38118-6072 U.S.A.
TEL (901) 362-0100

SCALE	1:25	DESCRIPTION	DIAGRAM (CAM-T-DVX)		
PROJECT CODE	DVX	MATERIAL	-		
WEIGHT	-	SECTION #	-		
REVIEWED	APPROVED	DRAWN BY: CARLISLE	RELEASE DATE: 20-MAR-01	RELEASE E. A.: 3164	PART NUMBER: 69005 / REVISION: C

UNLESS OTHERWISE SPECIFIED, STANDARD ALUMA-FORM, INC. MANUFACTURING TOLERANCES APPLY